G3860B, G3865B
G3860F, G3865F Fryers

INSTALLATION and SERVICING INSTRUCTIONS

This appliance must be installed and serviced by a competent person as stipulated by the Gas Safety (Installation & Use) Regulations.

IMPORTANT
The installer must ensure that the installation of the appliance is in conformity with these instructions and National Regulations in force at the time of installation. Particular attention MUST be paid to:

Gas Safety (Installation & Use) Regulations Health And Safety At Work etc. Act
Local and National Building Regulations Fire Precautions Act

Detailed recommendations are contained in Institute of Gas Engineers published documents: **IGE/UP1**, **IGE/UP/2** **BS6173** and **BS5440**

These appliances have been UKCA/CE-marked based on compliance with the Gas Appliance Regulations/Product Safety and Metrology Regulations, Electrical and Electromagnetic Compatibility (EMC) Regulations/Directives for the Countries, Gas Types and Pressures as stated on the data plate.

WARNING: TO PREVENT SHOCKS, ALL APPLIANCES WHETHER GAS OR ELECTRIC, MUST BE EARTHED.

On completion of the installation, these instructions should be left with the Engineer-in-Charge for reference during servicing. Further to this, The Users Instructions should be handed over to the User, having had a demonstration of the operation and cleaning of the Appliance.

IT IS MOST IMPORTANT THAT THESE INSTRUCTIONS BE CONSULTED BEFORE INSTALLING AND COMMISSIONING THIS APPLIANCE. FAILURE TO COMPLY WITH THE SPECIFIED PROCEDURES MAY RESULT IN DAMAGE OR THE NEED FOR A SERVICE CALL.

PREVENTATIVE MAINTENANCE CONTRACT
To obtain maximum performance from this unit regular servicing of the appliance should be undertaken to ensure correct operation, it is functioning as intended, and safe to use. We recommend servicing in accordance with SFG20 Maintenance Schedules and as a minimum, after 2,500 hours of use, or annually, whichever comes first and that a maintenance contract be arranged with an appointed service contact. Visits may then be made at agreed intervals to carry out adjustments and repairs.

WEEE Directive Registration No. WEE/DC0059TT/PRO At end of unit life, dispose of appliance and any replacement parts in a safe manner, via a licenced waste handler.
Units are designed to be dismantled easily and recycling of all material is encouraged whenever practicable.

Falcon Foodservice Equipment
HEAD OFFICE AND WORKS
Wallace View, Hillfoots Road, Stirling. FK9 5PY. Scotland.
Phone: 01786 455200

T100980 Ref. 11

S.0 SAFETY GUIDANCE

S.1 GENERAL SAFETY

S.1.1 These instructions are only valid if the country code appears on the appliance. If the code does not appear on the appliance, refer to the technical instructions for adapting the appliance to the conditions for use in that country.

S.1.2 These appliances have been UKCA/CE-marked based on compliance with the Gas Appliance Regulations/Product Safety and Metrology Regulations, Electrical and Electromagnetic Compatibility (EMC) Regulations/Directives for the Countries, Gas Types and Pressures as stated on the data plate.

S.1.3 This equipment is for professional use only and must be used by qualified persons.

S.1.4 Never leave this appliance unsupervised when in use and always turn products off at the end of service.

S.1.5 The installer must instruct the responsible person(s) of the correct operation and maintenance of the appliance.

S.1.6 Check that no damage has occurred to the appliance or supply cord during transit. If damage has occurred, do not use this appliance.

S.1.7 If fitted to the appliance, ensure the supply cord is routed free from the appliance to avoid damage.

S.1.8 Min-Level Mark: Medium should never be allowed to drop below the mark. Should this occur, top up immediately or switch off the fryer.

S.1.9 Suitable Protective clothing must be worn when topping up whilst the fryer is hot.

S.1.10 To prevent surge boiling. DO NOT EXCEED recommended loads or charge pan with over-wet food items. NEVER leave a working appliance unattended.

S.1.11 If the appliance is fitted with an oil bucket, take care when removing as oil bucket is heavy when full.

S.1.12 Training and Competence: To help ensure the safe use of this appliance there is a requirement for you to provide whatever information, instruction, training and supervision as is necessary to ensure, so far as is reasonably practicable, the health and safety of all users.

S.1.13 For further help and information on training and competence we refer you to the Health & Safety Executive website; www.hse.gov.uk document ref: health and safety training INDG345. International customers should default to the health and safety guidelines provided by your government body.

S.1.14 Risk Assessment: As part of managing the health and safety of your business you must control any risks identified in your commercial kitchen. To do this you need to think about what might cause harm to people and decide whether you are taking reasonable steps to prevent that harm. This is known as risk assessment. It is important to consider the environment around the product as well as the product itself. For example, oil or food spills will present a significant risk so users so the need to immediately clean up such spills must be reflected in staff training.

S.1.15 Record the training that you provide and support it by providing safe system of work (SSOW) documents that set out procedures to be followed for potentially hazardous tasks.

S.1.16 For further help and information on risk assessments we would refer you to you the Health and Safety Executive website; www.hse.gov.uk document ref: risk assessment INDG163. International customers should default to the health and safety guidelines provided by your government body.

S.2 INSTALLATION SAFETY

S.2.1 Installation must meet national or local regulations. Attention must be paid to: safety (installation & use) regulations, health and safety at work act, local and national building regulations, fire precautions act.

S.2.2 The installer must instruct the responsible person(s) of the correct operation and maintenance of the appliance.

S.2.3 On gas appliances, only competent persons are allowed to service or convert the appliance to another gas type.

S.2.4 Put a documented system in place for periodic inspections, testing and maintenance of our gas/ electrical appliances. Check that the fixed electrical installation has been inspected and tested by a competent electrical contractor (e.g. NICEIC-approved or ECA member) as prescribed in BS7671, within the last 5 years.

S.3 ELECTRICAL SAFETY

S.3.1 To prevent shocks, this appliance must be earthed.

S.3.2 This unit is fitted with an equipotential connection at the rear on the base.

S.3.3 Before attempting any maintenance, isolate the appliance at the mains switch and take steps to ensure that it is not inadvertently switched on.

S.3.4 We recommend, Supplementary electrical protection with the use of a type A residual current device (RCD).

S.3.5 Fixed wiring appliances incorporate a locally situated switch disconnector to connect to, which is easily accessible for switching off and safe isolation purposes. The switch disconnector must meet the specification requirements of IEC 60947.

S.4 GAS SAFETY

S.4.1 Gas appliances must have a stop cock fitted in the supply pipe work. The user must be familiar with the location and operation of this device in order to turn off the supply of gas in the event of an emergency.

S.4.2 Before Inspection, Servicing or Conversion, Turn Off Gas at isolator.

S.5 FIRE SAFETY

Fryers can present various hazards in the catering environment if not correctly used, operated, and maintained. Hazards including fire, burns from hot oil, contact with hot surfaces, fumes from boiling cleaning chemicals, eye injuries from splashes and slips from oil spillages.

Operator Competency and Training

S.5.1 Ensure you are trained in the safe and proper use of the fryer and know how to turn it off and switch the power or gas off at the mains.

S.5.2 Ensure you are familiar with the kitchen fire safety procedures and the location and proper use of correct fire safety equipment.

Fryer Safety Equipment

S.5.3 1.5.3 Provide an appropriate BS compliant fire blanket, and an adequate number of fire extinguishers that comply with BS EN 3 (parts 1-6) and carry a BAFE or LPCB approval mark. At least one must be appropriate for use on electrical fires, and one for deep-fat fryers (Class F).

Fryer Suppression System

S.5.4 We recommend kitchen equipment and extraction systems are protected with a fire suppression system. Check your insurance as this may also be a condition of your policy.

S.5.5 1.5.5 Protect cooking and extraction equipment (including any associated extraction ductwork and hoods inside the building) by having an extinguishing system installed, in line with (or the equivalent of) LPS 1223. The system should include a local alarm, automatic activation by a detection system and manual activation – located a safe distance away from the cooking equipment, preferably by a fire escape route door.

Operational Fryer Safety

S.5.6 Do not leave the fryer unattended when powered on or when it is in use.

S.5.7 Always switch the fryer off and replace the pan cover/ lid when not in use.

Cleaning

S.5.8 Ensure fryers are regularly cleaned serviced and maintained by a qualified and competent service provider, and there is enough room around the appliance to do so.

S.5.9 Ensure that the appliance, surrounding work area and extraction system are regularly cleaned, (at least weekly) to avoid the build-up of fats oils and greases that could present a fire risk. A deep clean should be undertaken at least every 6 months by a specialist contractor.

Oil Safety

S.5.10 Do not operate the fryer with no or low oil levels.

S.5.11 Solid Fat (e.g. Beef Tallow) must be melted using the fat melt mode in order to avoid fire caused by burning of the fat and/or overheating. We do not recommend using Solid Fat if the fryer control does not have a Fat Melt Cycle.

S.5.12 Regularly change your cooking oil. Use colour charts to check on oil quality.

S.5.13 If you see the cooking oil or fat smoking, switch the fryer off, allow to cool, drain oil, clean and dry fryer pan thoroughly and replace with fresh oil. If the clean fryer oil smokes when heated, switch off immediately and contact service engineer. Do not switch fryer back on.

S.5.14 Never add water to the fryer medium at any time.

Gas and Electrical Isolation Points

S.5.15 Ensure any separate gas shut off switches and electric switches provided for cooking equipment and/or extractor fans are accessible and clearly labelled.

Care and Maintenance of Thermal and Operational Safety Devices

S.5.16 Your fryer is fitted with a thermal safety device. This will stop heating of medium if it becomes overheated. This appliance will always fail safe so long as there is no damage to the thermal safety device.

S.5.17 Failure to clean and check the safety and operational thermostats can impact the performance of the appliance and increase the risk of an appliance fire.

S.5.18 Damage to the thermostat sensors or their capillaries can increase the risk of overheating or fire.

S.5.19 Do not operate the fryer if the safety devices located within the fryer pan appear to be dislodged or damaged.

S.6 MAINTENANCE SAFETY

S.6.1 Unless otherwise stated, parts which have been protected by the manufacturer must not be adjusted by the installer or end user.

S.6.2 Before any cleaning is undertaken, isolate appliance from mains power supply at isolator switch.

S.6.3 Suitable protective clothing must be worn when cleaning this appliance.

S.6.4 If filtration is fitted, never pump water through the filtration pump at any time! Water and hot oil are an explosive mixture.

S.6.5 Oil must be allowed to cool to a safe temperature before draining. Do not overfill oil bucket. All spills onto the product and on the floor should be cleaned up immediately.

S.6.6 The appliance must not be cleaned with a jet of water or be steam cleaned. Do not use acid or halogen-based (e.g. chlorine) descaling liquids, flammable liquids, cleaning aids or cleaning powders.

S.6.7 Failure due to lack of proper cleaning is not covered by warranty.

S.6.8 Particular attention must be paid to cleaning the Thermostat bulb and Capillaries.

S.6.9 Take care when cleaning not to dislodge or damage thermostat sensors mounted on the base and side of the pan.

S.6.10 If the thermostats or capillaries are damaged then do not turn the appliance on and contact Falcon or you approved service provider to undertake the necessary repairs.

S.6.11 To obtain maximum performance from this unit regular servicing of the appliance should be undertaken to ensure correct operation, it is functioning as intended, and safe to use. We recommend servicing in accordance with SFG20 Maintenance Schedules and as a minimum, after 2,500 hours of use, or annually, whichever comes first and that a maintenance contract be arranged with an appointed service contact. Visits may then be made at agreed intervals to carry out adjustments and repairs.

S.6.12 During Servicing of the appliance, where applicable, please ensure seals are checked. If the integrity of the seal is compromised, it must be replaced.

SECTION 1 – INSTALLATION

Electrical Safety and Advice Regarding Supplementary Electrical Protection

Commercial kitchens and foodservice areas are environments where electrical appliances may be located close to liquids, or operate in and around damp conditions or where restricted movement for installation and service is evident.

The installation and periodic inspection of the appliance should only be undertaken by a qualified, skilled and competent electrician; and connected to the correct power supply suitable for the load as stipulated by the appliance data label.

The electrical installation and connections should meet the necessary requirements to the local electrical wiring regulations and any electrical safety guidelines.

We recommend:-

- Supplementary electrical protection with the use of a type A residual current device (RCD)
- Fixed wiring appliances incorporate a locally situated switch disconnector to connect to, which is easily accessible for switching off and safe isolation purposes. The switch disconnector must meet the specification requirements of IEC 60947.

Your attention is drawn to:-
BS 7671:2018–Guidance Note 8 - 8.13 : Other locations of increased risk

It is recognized that there may be locations of increased risk of electric shock other than those specifically addressed in Part 7 of BS 7671. Examples of such locations could include laundries where there are washing and drying machines in close proximity and water is present, and commercial kitchens with stainless steel units, where once again, water is present.

Where because of the perception of additional risks being likely, the installation designer decides that an installation or location warrants further protective measures, the options available include:

- Automatic Disconnection of Supply (ADS) by means of a residual current device having a residual operating current not exceeding 30mA;
- Supplementary protective equipotential bonding; and
- Reduction of maximum fault clearance time.

The provision of RCDs and supplementary bonding must be specified by the host organization’s appointed installation designer or electrical contractor and installed by a suitably qualified and competent electrician so as to comply with Regulations 419.2 and 544.2

UNLESS OTHERWISE STATED, PARTS WHICH HAVE BEEN PROTECTED BY THE MANUFACTURER ARE NOT TO BE ADJUSTED BY THE INSTALLER.

1.1 MODEL NUMBERS, NETT WEIGHTS and DIMENSIONS

Model	Width (mm)	Depth (mm)	Height (mm)	Weight
G3860B	600	770	900	89
G3860F	600	770	900	100
G3865B	600	770	900	113
G3865F	600	770	900	136

1.2 SITING

The unit should be installed on a level, fireproof surface in a well lit, draught free position. A clear space of 150mm should be left between the rear and sides of the fryer and any combustible wall.

The lowest point of the oil bucket carriage must be at least 10mm from the floor.

Important - If appliance is to be installed in suite formation with other matching units, the instructions for all models must be consulted to determine the necessary clearances to any combustible rear wall or overlying surface. Some models require greater clearances than others and the largest figure quoted in individual instructions will therefore determine clearance of complete suite adjoining appliances.

1.3 VENTILATION

Adequate ventilation must be provided to supply sufficient fresh air for combustion. This should allow easy removal of combustion products which may be harmful to health.

Recommendations for Ventilation of Catering Appliances are given in BS5440:2.

For multiple installations, the requirements for individual units require to be added together. Installation should be carried out in accordance with local and/or national regulations which apply at the time. A competent installer MUST be employed.

1.4 GAS SUPPLY

The incoming service must be of sufficient size to supply full rate gas without excessive pressure drop. A gas meter is connected to the service pipe by Gas Supplier. Any existing meter should be checked by the supplier to ensure that it is of adequate capacity to pass required rate of gas for the unit, in addition to any other gas equipment that has been installed.

The multifunctional control has no in-built governor therefore an external device must be fitted to natural gas models.

Installation pipework should be fitted in accordance with IGE/UP/2. This should not be smaller than gas inlet connection.

G3860B - Rp¾ *(¾" BSP)*

G3865B - 2 x Rp½ *(½" BSP)*

G3860F - Rp¾ *(¾" BSP)*

G3865F - 2 x Rp½ *(½" BSP)*

An inlet manifold is supplied with the G3865B and G3865F to enable connection to 1 x Rp¾ *(¾" BSP)* mains inlet (if required).

If flexible tube is used, the gas supply tubing or hose shall comply with national requirements in force. These should be periodically examined and replaced as necessary.

An isolating cock must be located close to the unit to allow shutdown during an emergency or servicing. The installation should be checked for gas tightness and purged as specified in IGE/UP/1.

1.5 ELECTRICAL SUPPLY –

The unit is equipped with a 3-Core flexible power cable with standard UK 3 Pin plug, fitted with a 13A fuse. A regular 13A socket can be used. If a supply is provided through a distribution fuse box it must be via a fuse with a maximum rating of 13A.

In the event of a mains cable being replaced, any new cable should comply with 60245 IEC 57 designation (H05 RN-F)

	Rated Voltage	Rated Current
G3860F Fryer	230v	1.26A
G3865F Fryer	230v	2.52A

WARNING: Each individual appliance must be earthed!
The appliance is also provided with a terminal for the connection of an external equipotential conductor. This terminal is in effective electrical contact with all fixed exposed metal parts of the appliance, and shall allow the connection of a conductor having a nominal cross-sectional area of up to 10 mm². It is located on the rear panel and is identified by the following label and must only be used for bonding purposes.

1.6 WATER SUPPLY –

Not applicable to these units.

1.7 TOTAL GAS RATES - NATURAL and PROPANE GAS

Model	kW	Btu/hr
G3860B/60F	30	102,360
G3865B/65F	2 x 16.7	2 x 57,000

1.8 INJECTOR SIZE

1.8.1 Natural Gas

Model	Pilot Burner	Cross- Lighter	Main Burner
G3860B/60F	51	0.026	2 x Ø3.3mm
G3865B/65F	51	0.026	4 x Ø2.38mm

1.8.2 Propane Gas

Model	Pilot Burner	Cross-Lighter	Main Burner
G3860B/60F	35	0.016	2 x Ø1.95mm
G3865B/65F	35	0.016	4 x Ø1.47mm

1.9 GAS PRESSURE ADJUSTMENT

1.9.1 Supply Pressures

A pressure test point is fitted on the burner manifold and the operating pressure is shown in the tables below. On G3865B and G3865F model, burner pressure should be set with both pans turned on.

An adjustable governor is required on Natural Gas models.

Gas Type	mbar	Inches w.g.
Natural Gas	20	8
Propane Gas	37	14.8

1.9.2 Natural Gas Burner Pressures

Model	mbar	Inches w.g.
G3860B/60F	11.2	4.8
G3865B/65F	13	5.2

1.9.3 Propane Gas Burner Pressures

Model	mbar	Inches w.g.
G3860B/60F	34.5	13.8
G3865B/65F	35.6	14.2

1.10 BURNER ADJUSTMENTS

1.10.1 Pilot

No adjustment is available.

Main Burner - No aeration adjustment is necessary, however gas pressure should be set as per value shown in Section 1.9.

SECTION 2 -

ASSEMBLY and COMMISSIONING

2.1 ASSEMBLY

The unit is packed as a complete assembly, except the flue. To fit this, slide flue over up stand on hob rear and secure with fixings along lower front and rear edges. Slot basket hanger over knurled nuts and hand-tighten.

2.2 APPLIANCES ON CASTORS

For units on castors, refer to guidelines in BS6173. These state that where wheels, castors or rollers are used, these must be fitted with a brake or locking device. This should be accessible to operator from front or side. After leveling ensure at least a 10mm gap is provided between the floor & the oil container carriage.

2.3 CONNECTION TO A GAS SUPPLY

Gas supply piping and unit connection must be installed in accordance with regulations listed on front page of this document.

A gas isolating cock must be fitted to the supply in a position that is readily accessible to operator.

2.4 CONNECTION TO AN ELECTRICAL SUPPLY

Ensure the supply cord is routed free from the appliance to avoid damage.
Check that no damage has occurred to the appliance or supply cord during transit. If damage has occurred, do not use this appliance.
We recommend supplementary electrical protection with the use of a residual current device (RCD).

The fuse rating should be 13A.

Colour coding of the power supply cables is as follows Live – **Brown**, Neutral - **Blue**, Earth – **Green/Yellow**..

.

2.5 CONNECTION TO A WATER SUPPLY

Not applicable to these units.

2.6 PRE-COMMISSIONING CHECK

Prior to operation, ensure that all packing material has been removed from unit.

2.6.1 Setting the Gas Pressure

a) It is necessary to check gas pressure during commissioning. A suitable pressure gauge must be connected to test point on supply manifold.

b) Turn on main gas valve at supply.

c) Light burners as detailed in User Instructions. The supply pipes may contain air therefore it may be necessary to repeat lighting procedure.

d) **Natural gas models only**. Adjust governor to setting as detailed in Section 1.9.

e) Disconnect pressure gauge from test point. Replace sealing screw and test gas soundness.

2.7 INSTRUCTION TO USER

After installing and commissioning the fryer, hand User Instructions to operator or purchaser. Ensure details to light, turn off, use and clean are properly understood. The main gas isolating valve location should be made known to user and the procedure for operation in event of an emergency should be demonstrated.

SECTION 3 -

SERVICING and CONVERSION

SERVICE INFORMATION

This unit carries an extensive mainland UK warranty. The warranty is in addition to and does not change your statutory or legal rights.

The warranty policy can be found on our website which details the conditions of the warranty and the exclusions.

https://www.falconfoodservice.com/info-centre/policy

Service calls to equipment under warranty will be carried out in accordance with the conditions of sale.

Warranty calls can be made between 8:30 am and 5:00 pm weekdays only.

To ensure your warranty enquiry is handled as efficiently as possible, ensure you have the following appliance information prior to calling us:

1. Model number – found on data plate
2. Serial number – found on data plate
3. Brief description of the issue

To contact Falcon for a warranty issue dial (UK only) 01786 455 200 and select Warranty Issues from the menu.

Warning
BEFORE CARRYING OUT ANY MAINTENANCE ON THIS APPLIANCE ENSURE THE UNIT ELECTRICITY SUPPLY IS ISOLATED.
Controls are removed as follows:

MAINTENANCE CHECK

Regular servicing of the appliance should be undertaken to ensure correct operation, it is functioning as intended, and safe to use. We recommend servicing after 2,500 hours of use, or annually, whichever comes first.

Any maintenance schedule should be carried out in accordance with SFG20 Maintenance Schedule. Should any issues with the integrity of the components be identified these should be replaced. If the appliance is not considered safe the unit should be removed from service and the responsible person advised why the unit is not safe to use and what remedial action is needed. Contents of the maintenance schedule should be agreed with the maintenance provider.

After carrying out any servicing or exchange of gas carrying components -

ALWAYS CHECK FOR GAS TIGHTNESS!

3.1 GAS CONVERSION CHECK LIST

CHANGE MAIN INJECTORS CHANGE PILOT INJECTOR

CHANGE CROSS LIGHTING INJECTOR CHANGE DATA PLATE

To convert from natural to propane gas, remove governor.

To convert from propane to natural gas, fit external governor. Adjust unit manifold pressure as detailed in Section 1.9.2.

All relevant injectors to be changed to suit gas type.

3.2 BURNERS

Burners should be cleaned periodically to maintain maximum performance and are best cleaned with a wire brush. Blocked parts require to be cleared using a metal broach. Any material pushed into burner should be shaken out via air inlet.

3.2.1 Removal of Burner Assembly

Turn off main gas supply to unit, isolate from electrical supply and drain oil from pan. Remove fixings that secure pilot and cross-lighter assemblies to main burner and drop assemblies slightly. Disconnect compression joint above manifold. Disconnect the drain valve union elbow and remove drain valve assembly. Remove fixings that retain burner assembly front cross strap to side runners. Pull burner assembly forward *(approx. 25mm)* and drop it slightly to clear front cross strap. While supporting weight of assembly, push it back to clear rear strap from runners and lower to withdraw. Replace in reverse order.

3.2.2 Removal of Pilot Burner

Isolate main gas supply to unit. Disconnect pilot supply pipe compression nut and remove pipe from pilot burner. Withdraw injector. Undo thermocouple retaining nut and remove thermocouple from pilot burner. Pull lead from spark electrode.

Undo nuts that secure pilot burner bracket to burner. Withdraw pilot burner assembly. Replace in reverse order.

3.3 CLEANING THE INJECTORS

Injectors should be periodically cleaned using a wooden splinter or soft wire. Avoid use of metal reamers as these may distort or increase size of orifice.

3.3.1 Removal of Main Burner Injectors

Isolate main gas supply.

Use a 10mm open-ended spanner to remove injector.

3.3.2 Removal of Pilot/Cross-Lighting Injectors Isolate main gas supply. Undo pilot/cross lighter supply pipe compression nut and remove pipe from pilot/cross lighter burner.

Withdraw injector. Replace in reverse order.

3.4 FLAME FAILURE THERMOCOUPLE

Undo nuts at pilot assembly and valve body.

Unscrew the two fixing to the connector block.

3.5 PIEZO IGNITER/SPARK ELECTRODE

Isolate from electrical supply before working on appliance. The igniter is a piezo spark type. The electrode is mounted upon pilot burner bracket. Push button is located below valve mounted to control panel inside door at RH side.

Two wires are connected to push button at one end. One is orange in colour and the other is a green/yellow earth wire. Both must be connected at each end for igniter to function properly.

3.5.1 Removal of Igniter Switch

Remove igniter and earth lead connections from push button. Undo large nut that that secures push button flange to control compartment and remove device.

Replace in reverse order.

3.5.2 Removal of the Electrode

Remove igniter lead connection from electrode and remove nut located below electrode. Withdraw electrode downward from pilot burner bracket.

Replace in reverse order.

3.6 DRAIN VALVE

Disconnect the drain valve union elbow and remove drain valve assembly from the fryer. Fit new valve to the assembly and replace.

3.7 REMOVAL OF FILTRATION

Isolate from electrical supply before working on appliance. Remove the rear access panel and electrical box cover. Disconnect the filtration flexi hose from the pump. Disconnect the electrical coupling plug located inside the electrical box. remove the nut from the pump capacitor. Remove pump mounting bolts and lift pump clear taking the capacitor with it. Replace in reverse order.

Note: Check for oil leaks before replacing any panels.

3.8 THERMOSTATS

For removal of User thermostat, refer to Section 3.9.

Isolate from electrical supply before working on appliance

The safety thermostat is when activated, interrupts the millivolt signal from thermocouple tip and subsequently shuts down the gas supply in the event of user thermostat failing, causing oil to overheat.

Note : Manual intervention is required to reset safety thermostat if operated.

3.8.1 Re-setting Safety Thermostat

The safety thermostat is located behind door within main controls compartment. It is situated above the user thermostat temperature knob on RH of compartment.

Unscrew black plastic safety cover to expose spindle. The reset button is at the spindle centre The button may be pushed to reset safety thermostat when oil temperature drops below 200ºC.

Warning: Fully investigate reason for safety thermostat trip. Do not operate fryer unless both user and safety thermostats are operating to specification.

3.8.2 Checking the User Thermostat Calibration

Using a reliable thermometer immersed 25mm below oil surface at pan centre. Measure oil temperature when a steady condition has been established.

3.8.3 Replacement of Safety Thermostat

Isolate gas supply, isolate from electrical supply and drain cool oil from pan. Undo fixings that secure controls cover panel.

Remove fixings securing upper panel to LH side of controls cover panel.
Ease upper panel out and pull controls cover panel away from control valve knobs.
Remove nut that secures spindle of safety thermostat to controls cover panel.
Remove two wires from spark igniter push button terminals.
Remove the wires from the pump switch noting their position.
Controls cover panel may now be removed.
Undo nuts that secure thermostat capillary to pan front.
From inside pan, gently remove two nuts that secure safety thermostat bracket to pan base.
Release safety thermostat bulb from mounting bracket.
Carefully pull mounting bracket guard tube assembly free from thermostat capillary. Remove capillary through front of pan.
Remove white wires from thermostat.
Re-assemble parts in reverse order. Ensure small compression nut is not secured before thermostat is secured to mounting bracket inside pan.

3.8.4 Replacement of Pump Switch

Isolate from electrical supply
Undo fixings that secure controls cover panel.
Ease upper panel out and pull controls cover panel away from control valve knobs.
Remove the wires from the pump switch noting their position.
Depress retaining clips and remove switch
Insert new switch, Reconnect wires, Replace control Panel.

3.9 REMOVAL OF GAS CONTROL VALVE INCORPORATING USER THERMOSTAT

Isolate gas supply, isolate from electrical supply and drain cool oil from pan. Undo fixings that secure controls cover panel.

Remove fixings that secure upper panel to LH side of controls cover panel.

Ease the upper panel out and pull controls cover panel away from control valve knobs.

Remove nut that secures spindle of safety thermostat to controls cover panel.

Remove two wires from spark igniter push button terminals.
Remove the wires from the pump switch noting their position.
Controls cover panel may now be removed.

From inside pan, remove two fixings that secure thermostat bulb guard and bulb securing clamp to front face of pan.

Remove bulb guard and pull thermostat from bulb securing clamp.

Undo pan boss nuts that secure thermostat capillary to pan front. Gently pull thermostat bulb through pan boss.

Remove gas inlet and outlet at control valve. Remove thermocouple from brass interrupter block. Remove pilot pipe connection.

Control valve/user thermostat may now be removed.

Re-assemble parts in reverse order. Ensure pan boss nuts are not secured before thermostat is fixed to mounting bracket.

3.10 GOVERNOR

An external governor must be fitted to natural gas units. No in-built governor is fitted to this appliance.

SECTION 4 - SPARES

When ordering spare parts, always quote unit type and serial number.

This information will be found on data badge on upper panel behind door.

G3860F Wiring Diagram

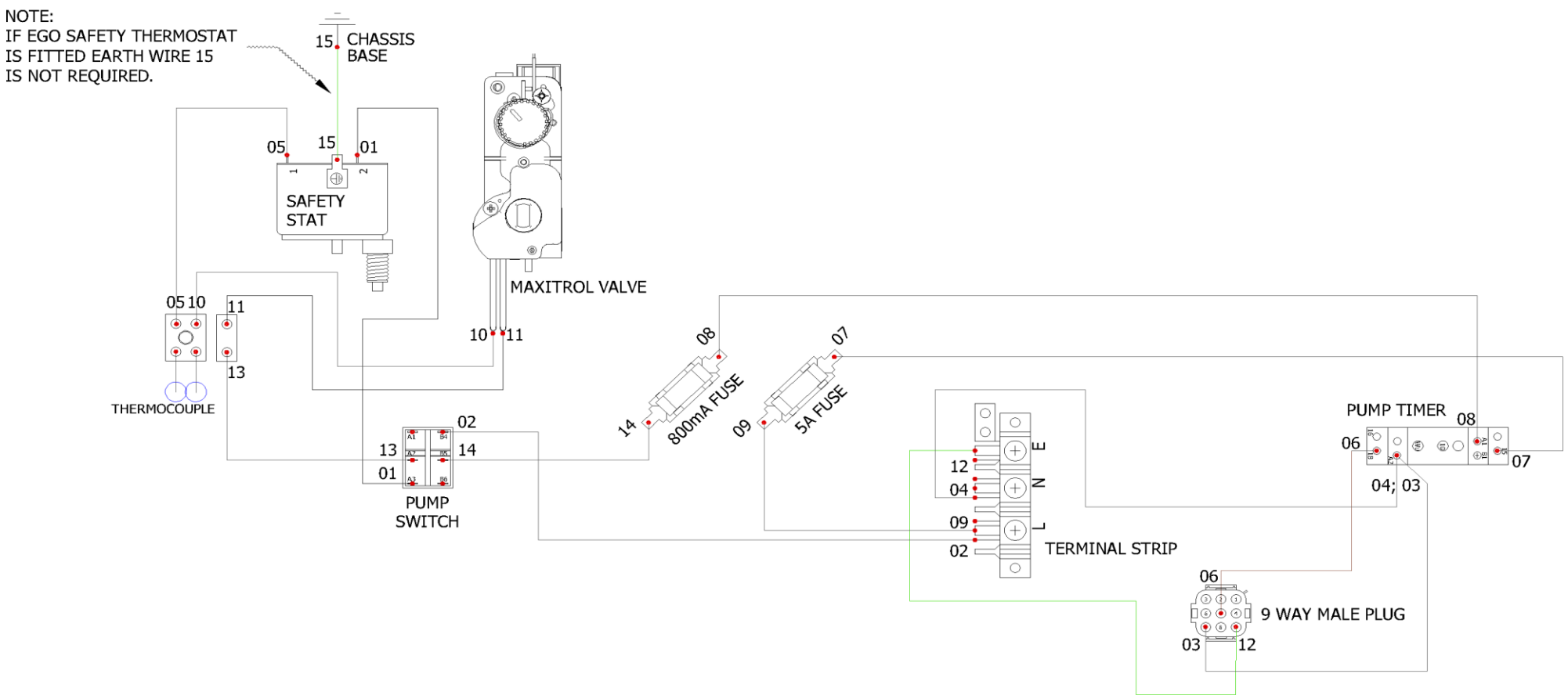

G3865F Wiring Diagram

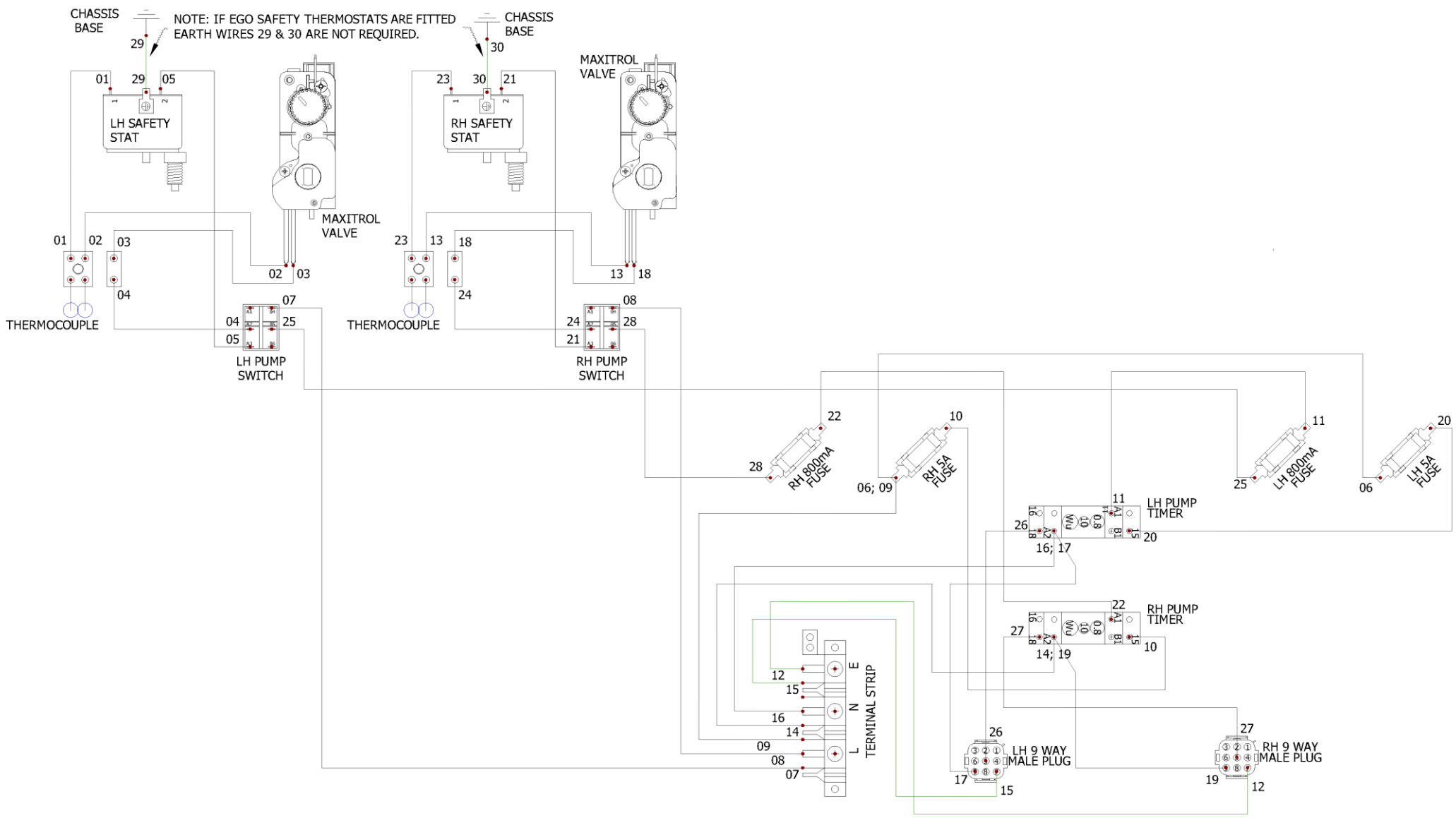

G3860F Circuit Diagram

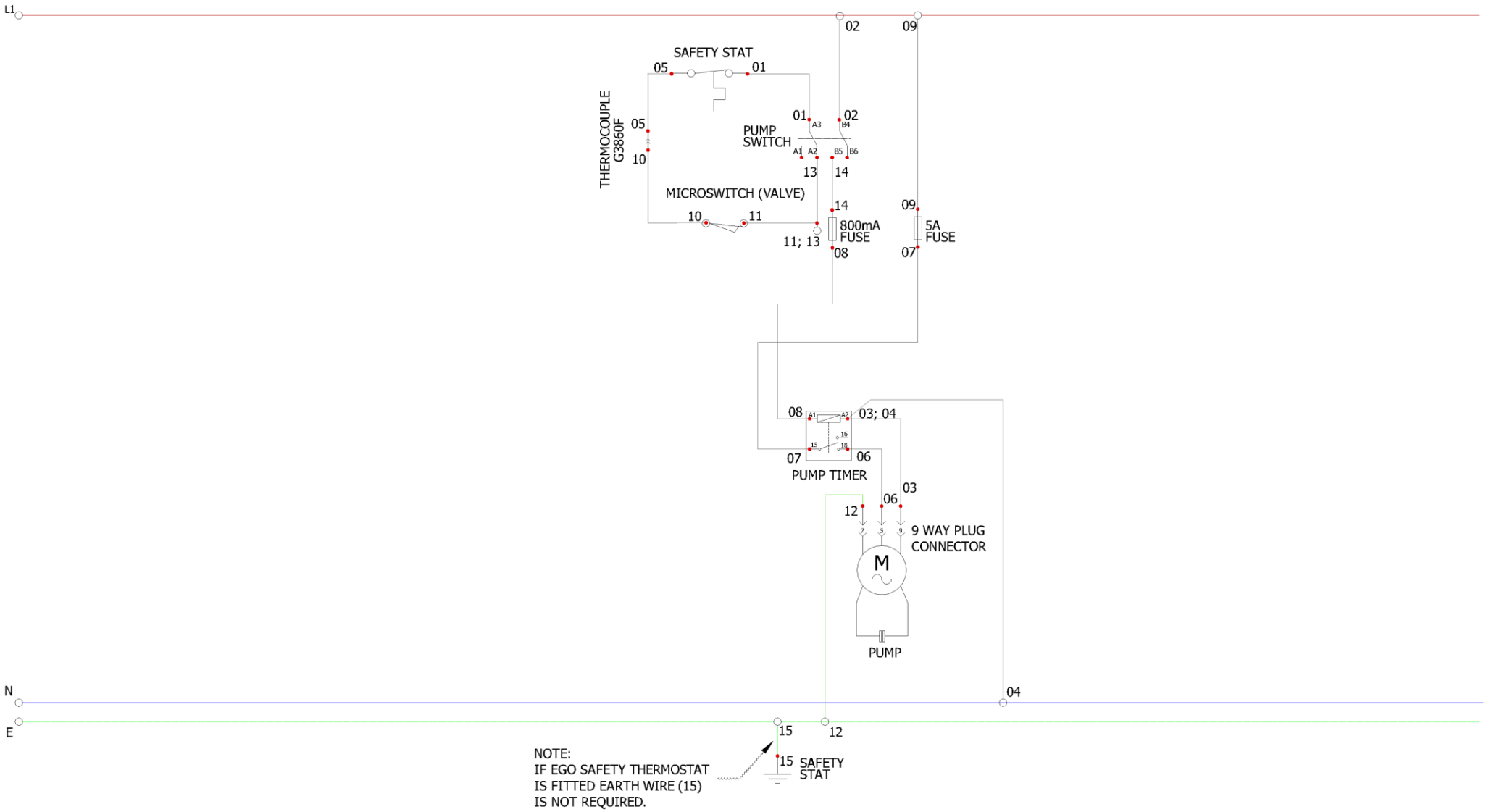

G3865F Circuit Diagram